IsoSafe

KEA 116 A2

1x16A 400V 7.5kW

PRODUCT NUMBER	44159
GTIN	6419410441596
ETIM CLASS	EC000216

MEASUREMENTS

HEIGHT	158.5 mm
WIDTH	104 mm
DEPTH	80 mm
VOLUME	1.3187 l
NET WEIGHT	1.0527 kg

LOGISTICAL DATA

SALES UNIT	1
PACKAGE SIZE 1	1
PACKAGE SIZE 1 DEPTH	80 mm
PACKAGE SIZE 1 HEIGHT	158.5 mm
PACKAGE SIZE 1 WIDTH	104 mm
PACKAGE SIZE 1 WEIGHT	1.0527 kg
PACKAGE SIZE 1 VOLUME	1.3187 l

DIMENSIONAL DRAWING

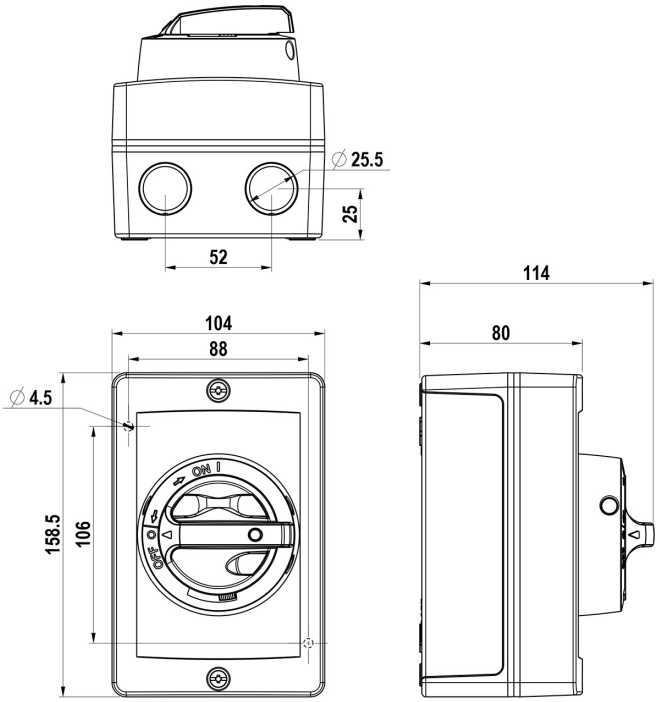

We continuously improve our products; specifications, features and appearances may change without prior notice.

TECHNICAL DATA

NUMBER OF POLES	1
ENCLOSURE	A2 (104 x 159 x 80 mm)
ENCLOSURE TYPE	Aluminium
EMC	No
ATEX	No
IP RATING	IP66
NEMA	4
RATED OPERATIONAL CURRENT AC-23A 415 V, IE (A)	16
RATED OPERATIONAL POWER, 1-PHASE 1500 RPM SQUIRREL-CAGE MOTOR AC-23A 240 V (KW)	3
RATED INSULATION VOLTAGE, UI (V)	800
SWITCH TYPE DESCRIPTION	Isolating switch
NOMINAL VALUES WITH CABLE SIZE (MM^2)	4
RATED THERMAL CURRENT, ITH (A)	25
RATED THERMAL CURRENT (ENCLOSED), ITHE (A)	25
RATED OPERATIONAL CURRENT AC-21A 415 V, IE (A)	25
RATED OPERATIONAL CURRENT AC-22A 415 V, IE (A)	16
RATED OPERATIONAL CURRENT AC-23A 240 V, IE (A)	16
RATED FUSED SHORT-CIRCUIT CURRENT, BACK-UP FUSE OPTION 1 (A)	25
RATED FUSED SHORT-CIRCUIT CURRENT, R.M.S. IQ OPTION 1 (KA)	50
RATED FUSED SHORT-CIRCUIT CURRENT, PEAK VALUE (KA)	3.8

We continuously improve our products; specifications, features and appearances may change without prior notice.

RATED IMPULSE WITHSTAND VOLTAGE, UIMP (KV)	8
RATED SHORT-CIRCUIT MAKING CAPACITY, ICM 690 V (KA)	1
RATED SHORT-TIME WITHSTAND CURRENT 1 S, ICW 690 V (KA)	0.7
RATED BREAKING CAPACITY, AC-23A 415 V (A)	128
ELECTRICAL ENDURANCE (NUMBER OF OPERATIONS)	3000
MECHANICAL ENDURANCE (NUMBER OF OPERATIONS)	50000
TERMINAL / BOLT SIZE CU (MM^2)	1,5..16
MAXIMUM TERMINAL TORQUE (NM)	1.8
SWITCH TYPE	Load Break Switch

We continuously improve our products; specifications, features and appearances may change without prior notice.