IsoSafe

- KER 316UL RA2RS

3x16A 400V 7.5kW

PRODUCT NUMBER	30726
GTIN	6419410307267
ETIM CLASS	EC000216

MEASUREMENTS

HEIGHT	258 mm
WIDTH	120 mm
DEPTH	113 mm
VOLUME	3.4985 l
NET WEIGHT	1.9745 kg

LOGISTICAL DATA

PACKAGE SIZE 1 DEPTH	113 mm
PACKAGE SIZE 1 HEIGHT	258 mm
PACKAGE SIZE 1 WIDTH	120 mm
PACKAGE SIZE 1 WEIGHT	1.9745 kg
PACKAGE SIZE 1 VOLUME	3.4985 l

DIMENSIONAL DRAWING

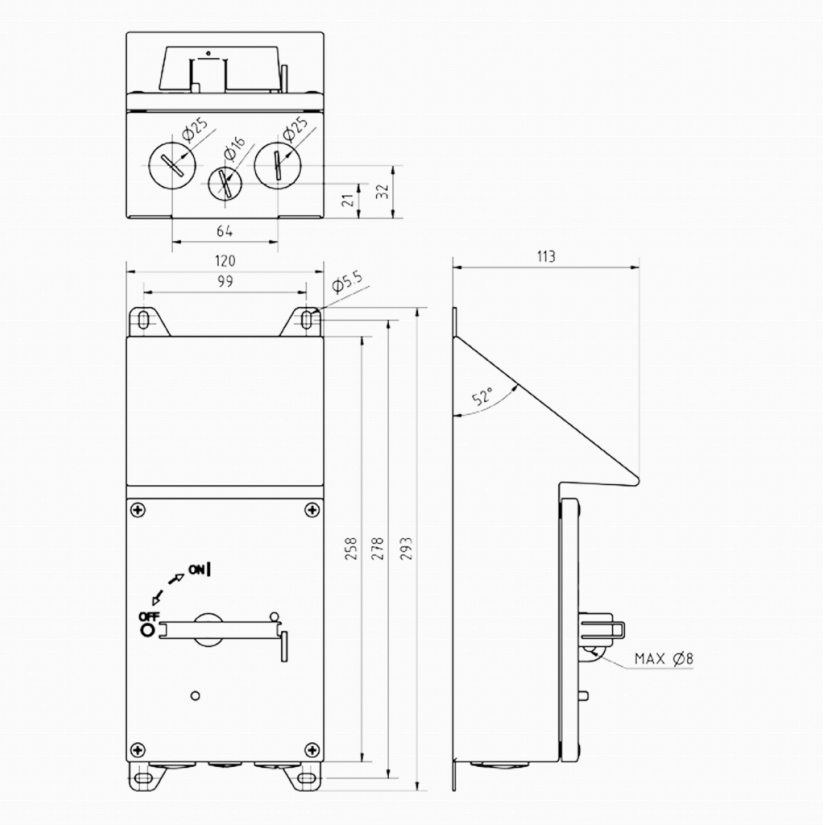

We continuously improve our products; specifications, features and appearances may change without prior notice.

TECHNICAL DATA

NUMBER OF POLES	3
ENCLOSURE	RA2RS (120 x 258 x 113 mm)
ENCLOSURE TYPE	Stainless steel enclosure (AISI 316L)
UL	UL 60947-4-1A
EMC	No
ATEX	No
IP RATING	IP66
NEMA	4X
RATED OPERATIONAL CURRENT AC-23A 415 V, IE (A)	16
RATED OPERATIONAL CURRENT AC-23A 690 V, IE (A)	16
RATED OPERATIONAL POWER, 3-PHASE 1500 RPM SQUIRREL-CAGE MOTOR AC-23A 690 V (KW)	11
RATED INSULATION VOLTAGE, UI (V)	800
AMPERE RATING (600V)	16
HP 208V	3
HP 415V	3
HP 480V	10
HP 600V	7.5
SWITCH TYPE DESCRIPTION	Manual motor controller
WIRE SIZE (CU ONLY)	14-8AWG
NOMINAL VALUES WITH CABLE SIZE (MM^2)	4
RATED THERMAL CURRENT, ITH (A)	25
RATED THERMAL CURRENT (ENCLOSED), ITHE (A)	25
RATED OPERATIONAL CURRENT AC-21A 415 V, IE (A)	25
RATED OPERATIONAL CURRENT AC-21A 500 V, IE (A)	25

We continuously improve our products; specifications, features and appearances may change without prior notice.

RATED OPERATIONAL CURRENT AC-21A 690 V, IE (A)	25
RATED OPERATIONAL CURRENT AC-22A 415 V, IE (A)	16
RATED OPERATIONAL CURRENT AC-22A 500 V, IE (A)	16
RATED OPERATIONAL CURRENT AC-22A 690 V, IE (A)	16
RATED OPERATIONAL CURRENT AC-23A 500 V, IE (A)	16
RATED OPERATIONAL POWER, 3-PHASE 1500 RPM SQUIRREL-CAGE MOTOR AC-23A 415 V (KW)	7.5
RATED OPERATIONAL POWER, 3-PHASE 1500 RPM SQUIRREL-CAGE MOTOR AC-23A 500 V (KW)	7.5
RATED FUSED SHORT-CIRCUIT CURRENT, BACK-UP FUSE OPTION 1 (A)	40
RATED FUSED SHORT-CIRCUIT CURRENT, R.M.S. IQ OPTION 1 (KA)	50
RATED FUSED SHORT-CIRCUIT CURRENT, PEAK VALUE (KA)	6.1
RATED IMPULSE WITHSTAND VOLTAGE, UIMP (KV)	8
RATED SHORT-CIRCUIT MAKING CAPACITY, ICM 690 V (KA)	2.5
RATED SHORT-TIME WITHSTAND CURRENT 1 S, ICW 690 V (KA)	1.7
RATED BREAKING CAPACITY, AC-23A 415 V (A)	128
RATED BREAKING CAPACITY, AC-23A 500 V (A)	128
RATED BREAKING CAPACITY, AC-23A 690 V (A)	128
ELECTRICAL ENDURANCE (NUMBER OF OPERATIONS)	3000

We continuously improve our products; specifications, features and appearances may change without prior notice.

MECHANICAL ENDURANCE (NUMBER OF OPERATIONS)	50000
TERMINAL / BOLT SIZE CU (MM^2)	1,5..16
MAXIMUM TERMINAL TORQUE (NM)	1.8
SWITCH TYPE	Load Break Switch

We continuously improve our products; specifications, features and appearances may change without prior notice.