IsoSafe

KET 616 T3

6x16A 400V 7,5kW

PRODUCT NUMBER	34556
GTIN	6419410345566
TECHNICAL NAME	6x16A 400V 7,5kW
ETIM CLASS	EC000216

MEASUREMENTS

HEIGHT	200 mm
WIDTH	150 mm
DEPTH	120 mm
VOLUME	3.6 l
NET WEIGHT	2.8121 kg

LOGISTICAL DATA

SALES UNIT	1
PACKAGE SIZE 1	1
PACKAGE SIZE 1 DEPTH	120 mm
PACKAGE SIZE 1 HEIGHT	200 mm
PACKAGE SIZE 1 WIDTH	150 mm
PACKAGE SIZE 1 WEIGHT	2.8121 kg
PACKAGE SIZE 1 VOLUME	3.6 l

DIMENSIONAL DRAWING

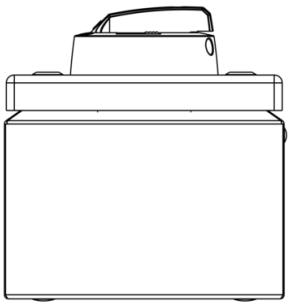

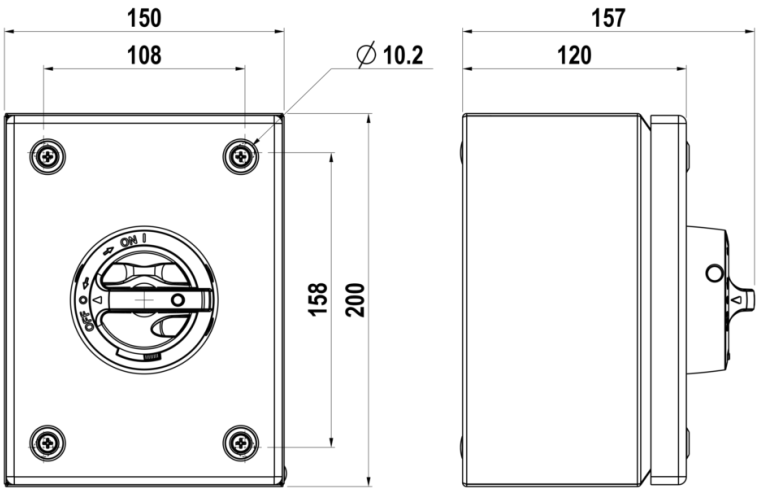

We continuously improve our products; specifications, features and appearances may change without prior notice.

TECHNICAL DATA

NUMBER OF POLES	6
ENCLOSURE	T3 (150 x 200 x 120 mm)
ENCLOSURE TYPE	Painted sheet steel
EMC	No
ATEX	No
IP RATING	IP66
NEMA	4
RATED OPERATIONAL CURRENT AC-23A 415 V, IE (A)	16
RATED OPERATIONAL CURRENT AC-23A 690 V, IE (A)	16
RATED OPERATIONAL POWER, 3-PHASE 1500 RPM SQUIRREL-CAGE MOTOR AC-23A 690 V (KW)	11
RATED INSULATION VOLTAGE, UI (V)	800
SWITCH TYPE DESCRIPTION	Isolating switch
NOMINAL VALUES WITH CABLE SIZE (MM^2)	4
RATED THERMAL CURRENT, ITH (A)	25
RATED THERMAL CURRENT (ENCLOSED), ITHE (A)	25
RATED OPERATIONAL CURRENT AC-21A 415 V, IE (A)	25
RATED OPERATIONAL CURRENT AC-21A 500 V, IE (A)	25
RATED OPERATIONAL CURRENT AC-21A 690 V, IE (A)	25
RATED OPERATIONAL CURRENT AC-22A 415 V, IE (A)	16
RATED OPERATIONAL CURRENT AC-22A 500 V, IE (A)	16

We continuously improve our products; specifications, features and appearances may change without prior notice.

RATED OPERATIONAL CURRENT AC-22A 690 V, IE (A)	16
RATED OPERATIONAL CURRENT AC-23A 500 V, IE (A)	16
RATED OPERATIONAL POWER, 3-PHASE 1500 RPM SQUIRREL-CAGE MOTOR AC-23A 415 V (KW)	7.5
RATED OPERATIONAL POWER, 3-PHASE 1500 RPM SQUIRREL-CAGE MOTOR AC-23A 500 V (KW)	7.5
RATED FUSED SHORT-CIRCUIT CURRENT, BACK-UP FUSE OPTION 1 (A)	25
RATED FUSED SHORT-CIRCUIT CURRENT, R.M.S. IQ OPTION 1 (KA)	50
RATED FUSED SHORT-CIRCUIT CURRENT, PEAK VALUE (KA)	3.8
RATED IMPULSE WITHSTAND VOLTAGE, UIMP (KV)	8
RATED SHORT-CIRCUIT MAKING CAPACITY, ICM 690 V (KA)	1
RATED SHORT-TIME WITHSTAND CURRENT 1 S, ICW 690 V (KA)	0.7
RATED BREAKING CAPACITY, AC-23A 415 V (A)	128
RATED BREAKING CAPACITY, AC-23A 500 V (A)	128
RATED BREAKING CAPACITY, AC-23A 690 V (A)	128
ELECTRICAL ENDURANCE (NUMBER OF OPERATIONS)	3000
MECHANICAL ENDURANCE (NUMBER OF OPERATIONS)	50000
TERMINAL / BOLT SIZE CU (MM^2)	1,5..16
MAXIMUM TERMINAL TORQUE (NM)	1.8
SWITCH TYPE	Load Break Switch

We continuously improve our products; specifications, features and appearances may change without prior notice.