IsoSafe

KET 240 T3

2x40A 400V 22kW

PRODUCT NUMBER	44362
GTIN	6419410443620
ETIM CLASS	EC000216

MEASUREMENTS

HEIGHT	200 mm
WIDTH	150 mm
DEPTH	120 mm
VOLUME	3.6 l
NET WEIGHT	2.1047 kg

LOGISTICAL DATA

SALES UNIT	1
PACKAGE SIZE 1	1
PACKAGE SIZE 1 DEPTH	120 mm
PACKAGE SIZE 1 HEIGHT	200 mm
PACKAGE SIZE 1 WIDTH	150 mm
PACKAGE SIZE 1 WEIGHT	2.1047 kg
PACKAGE SIZE 1 VOLUME	3.6 l

DIMENSIONAL DRAWING

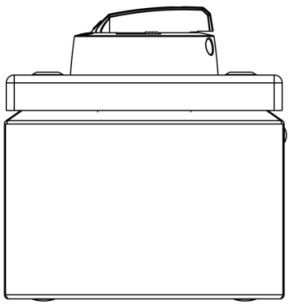

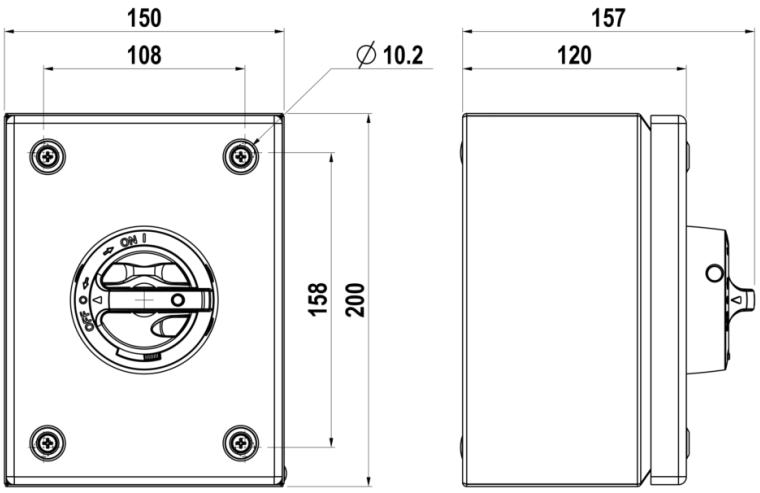

We continuously improve our products; specifications, features and appearances may change without prior notice.

TECHNICAL DATA

NUMBER OF POLES	2
ENCLOSURE	T3 (150 x 200 x 120 mm)
ENCLOSURE TYPE	Painted sheet steel
EMC	No
ATEX	No
IP RATING	IP66
NEMA	4
RATED OPERATIONAL POWER, 1-PHASE 1500 RPM SQUIRREL-CAGE MOTOR AC-23A 240 V (KW)	7.5
RATED INSULATION VOLTAGE, UI (V)	800
SWITCH TYPE DESCRIPTION	Isolating switch
NOMINAL VALUES WITH CABLE SIZE (MM^2)	16
RATED THERMAL CURRENT, ITH (A)	63
RATED THERMAL CURRENT (ENCLOSED), ITHE (A)	63
RATED OPERATIONAL CURRENT AC-23A 240 V, IE (A)	40
RATED FUSED SHORT-CIRCUIT CURRENT, BACK-UP FUSE OPTION 1 (A)	40
RATED FUSED SHORT-CIRCUIT CURRENT, R.M.S. IQ OPTION 1 (KA)	25
RATED FUSED SHORT-CIRCUIT CURRENT, PEAK VALUE (KA)	4.5
RATED IMPULSE WITHSTAND VOLTAGE, UIMP (KV)	8
RATED SHORT-CIRCUIT MAKING CAPACITY, ICM 690 V (KA)	1
RATED SHORT-TIME WITHSTAND CURRENT 1 S, ICW 690 V (KA)	0.7

We continuously improve our products; specifications, features and appearances may change without prior notice.

RATED BREAKING CAPACITY, AC-23A 415 V (A)	320
ELECTRICAL ENDURANCE (NUMBER OF OPERATIONS)	3000
MECHANICAL ENDURANCE (NUMBER OF OPERATIONS)	50000
TERMINAL / BOLT SIZE CU (MM^2)	1,5..16
MAXIMUM TERMINAL TORQUE (NM)	1.8
SWITCH TYPE	Load Break Switch

We continuously improve our products; specifications, features and appearances may change without prior notice.