IsoSafe

KET 4250C T5

4x250A 400V 132kW

PRODUCT NUMBER	34177
GTIN	6419410341773
ETIM CLASS	EC000216

MEASUREMENTS

HEIGHT	400 mm
WIDTH	300 mm
DEPTH	150 mm
VOLUME	18 l
NET WEIGHT	8.7229 kg

LOGISTICAL DATA

SALES UNIT	1
PACKAGE SIZE 1	1
PACKAGE SIZE 1 DEPTH	150 mm
PACKAGE SIZE 1 HEIGHT	400 mm
PACKAGE SIZE 1 WIDTH	300 mm
PACKAGE SIZE 1 WEIGHT	8.7229 kg
PACKAGE SIZE 1 VOLUME	18 l

DIMENSIONAL DRAWING

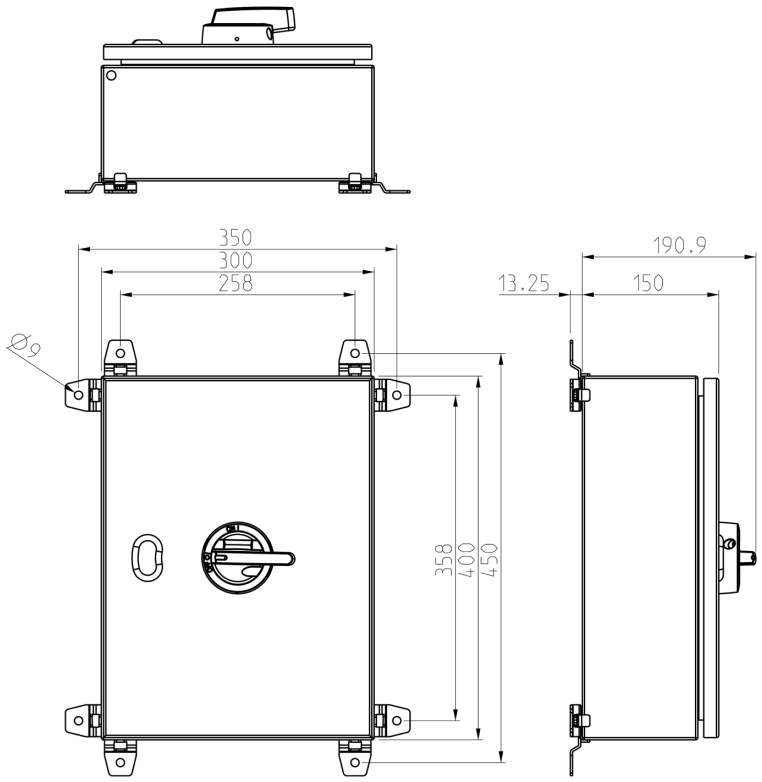

We continuously improve our products; specifications, features and appearances may change without prior notice.

TECHNICAL DATA

NUMBER OF POLES	4
ENCLOSURE	T5 (300 x 400 x 150 mm)
ENCLOSURE TYPE	Painted sheet steel
EMC	No
ATEX	No
IP RATING	IP66
NEMA	4
RATED OPERATIONAL CURRENT AC-23A 415 V, IE (A)	250
RATED INSULATION VOLTAGE, UI (V)	1000
SWITCH TYPE DESCRIPTION	Isolating switch
NOMINAL VALUES WITH CABLE SIZE (MM^2)	120
RATED THERMAL CURRENT, ITH (A)	250
RATED THERMAL CURRENT (ENCLOSED), ITHE (A)	250
RATED OPERATIONAL CURRENT AC-21A 415 V, IE (A)	250
RATED OPERATIONAL CURRENT AC-21A 500 V, IE (A)	250
RATED OPERATIONAL CURRENT AC-21A 690 V, IE (A)	250
RATED OPERATIONAL CURRENT AC-22A 415 V, IE (A)	250
RATED OPERATIONAL POWER, 3-PHASE 1500 RPM SQUIRREL-CAGE MOTOR AC-23A 415 V (KW)	132
RATED FUSED SHORT-CIRCUIT CURRENT, BACK-UP FUSE OPTION 1 (A)	250
RATED FUSED SHORT-CIRCUIT CURRENT, R.M.S. IQ OPTION 1 (KA)	50

We continuously improve our products; specifications, features and appearances may change without prior notice.

RATED FUSED SHORT-CIRCUIT CURRENT, PEAK VALUE (KA)	22
RATED IMPULSE WITHSTAND VOLTAGE, UIMP (KV)	8
RATED SHORT-CIRCUIT MAKING CAPACITY, ICM 415 V (KA)	11.4
RATED SHORT-TIME WITHSTAND CURRENT 1 S, ICW 415 V (KA)	6.5
RATED BREAKING CAPACITY, AC-23A 415 V (A)	2000
ELECTRICAL ENDURANCE (NUMBER OF OPERATIONS)	2000
MECHANICAL ENDURANCE (NUMBER OF OPERATIONS)	16000
TERMINAL / BOLT SIZE CU (MM^2)	M8
MAXIMUM TERMINAL TORQUE (NM)	15..22
SWITCH TYPE	Load Break Switch

We continuously improve our products; specifications, features and appearances may change without prior notice.