IsoSafe

# KET 325 T3

## 3x25A 400V 11kW

| | |
|---|---|
| PRODUCT NUMBER | 44376 |
| GTIN | 6419410443767 |
| ETIM CLASS | EC000216 |

## MEASUREMENTS

| | |
|---|---|
| HEIGHT | 200 mm |
| WIDTH | 150 mm |
| DEPTH | 120 mm |
| VOLUME | 3.6 l |
| NET WEIGHT | 2.1466 kg |

## LOGISTICAL DATA

| | |
|---|---|
| SALES UNIT | 1 |
| PACKAGE SIZE 1 | 1 |
| PACKAGE SIZE 1 DEPTH | 120 mm |
| PACKAGE SIZE 1 HEIGHT | 200 mm |
| PACKAGE SIZE 1 WIDTH | 150 mm |
| PACKAGE SIZE 1 WEIGHT | 2.1466 kg |
| PACKAGE SIZE 1 VOLUME | 3.6 l |

## DIMENSIONAL DRAWING

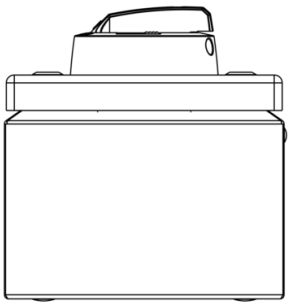

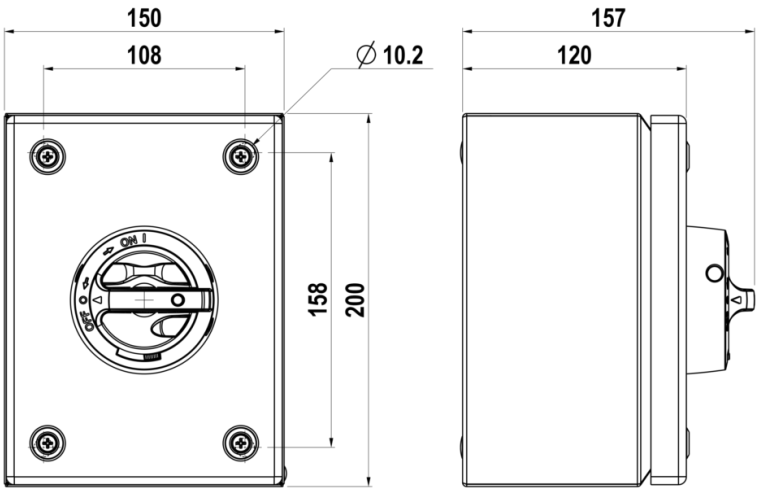


*We continuously improve our products; specifications, features and appearances may change without prior notice.*

## TECHNICAL DATA

| | |
|---|---|
| NUMBER OF POLES | 3 |
| ENCLOSURE | T3 (150 x 200 x 120 mm) |
| ENCLOSURE TYPE | Painted sheet steel |
| EMC | No |
| ATEX | No |
| IP RATING | IP66 |
| NEMA | 4 |
| RATED OPERATIONAL CURRENT AC-23A 415 V, IE (A) | 25 |
| RATED OPERATIONAL CURRENT AC-23A 690 V, IE (A) | 25 |
| RATED OPERATIONAL POWER, 3-PHASE 1500 RPM SQUIRREL-CAGE MOTOR AC-23A 690 V (KW) | 22 |
| RATED INSULATION VOLTAGE, UI (V) | 800 |
| SWITCH TYPE DESCRIPTION | Isolating switch |
| NOMINAL VALUES WITH CABLE SIZE ($MM^2$) | 10 |
| RATED THERMAL CURRENT, ITH (A) | 40 |
| RATED THERMAL CURRENT (ENCLOSED), ITHE (A) | 40 |
| RATED OPERATIONAL CURRENT AC-21A 415 V, IE (A) | 40 |
| RATED OPERATIONAL CURRENT AC-21A 500 V, IE (A) | 40 |
| RATED OPERATIONAL CURRENT AC-21A 690 V, IE (A) | 40 |
| RATED OPERATIONAL CURRENT AC-22A 415 V, IE (A) | 25 |
| RATED OPERATIONAL CURRENT AC-22A 500 V, IE (A) | 25 |

*We continuously improve our products; specifications, features and appearances may change without prior notice.*

| | |
|---|---|
| RATED OPERATIONAL CURRENT AC-22A 690 V, IE (A) | 25 |
| RATED OPERATIONAL CURRENT AC-23A 500 V, IE (A) | 25 |
| RATED OPERATIONAL POWER, 3-PHASE 1500 RPM SQUIRREL-CAGE MOTOR AC-23A 415 V (KW) | 11 |
| RATED OPERATIONAL POWER, 3-PHASE 1500 RPM SQUIRREL-CAGE MOTOR AC-23A 500 V (KW) | 15 |
| RATED FUSED SHORT-CIRCUIT CURRENT, BACK-UP FUSE OPTION 1 (A) | 25 |
| RATED FUSED SHORT-CIRCUIT CURRENT, R.M.S. IQ OPTION 1 (KA) | 50 |
| RATED FUSED SHORT-CIRCUIT CURRENT, PEAK VALUE (KA) | 3.8 |
| RATED IMPULSE WITHSTAND VOLTAGE, UIMP (KV) | 8 |
| RATED SHORT-CIRCUIT MAKING CAPACITY, ICM 690 V (KA) | 1 |
| RATED SHORT-TIME WITHSTAND CURRENT 1 S, ICW 690 V (KA) | 0.7 |
| RATED BREAKING CAPACITY, AC-23A 415 V (A) | 200 |
| RATED BREAKING CAPACITY, AC-23A 500 V (A) | 200 |
| RATED BREAKING CAPACITY, AC-23A 690 V (A) | 200 |
| ELECTRICAL ENDURANCE (NUMBER OF OPERATIONS) | 3000 |
| MECHANICAL ENDURANCE (NUMBER OF OPERATIONS) | 50000 |
| TERMINAL / BOLT SIZE CU ($MM^2$) | 1,5..16 |
| MAXIMUM TERMINAL TORQUE (NM) | 1.8 |
| SWITCH TYPE | Load Break Switch |

*We continuously improve our products; specifications, features and appearances may change without prior notice.*