IsoSafe
- KER 425UL RA2

4x25A 400V 11kW

PRODUCT NUMBER	34733
GTIN	6419410347331
ETIM CLASS	EC000216

MEASUREMENTS

HEIGHT	160 mm
WIDTH	120 mm
DEPTH	77 mm
VOLUME	1.4784 l
NET WEIGHT	0.7219 kg

LOGISTICAL DATA

PACKAGE SIZE 1 DEPTH	77 mm
PACKAGE SIZE 1 HEIGHT	160 mm
PACKAGE SIZE 1 WIDTH	120 mm
PACKAGE SIZE 1 WEIGHT	0.7219 kg
PACKAGE SIZE 1 VOLUME	1.4784 l

DIMENSIONAL DRAWING

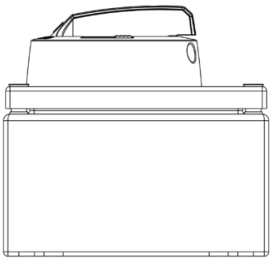

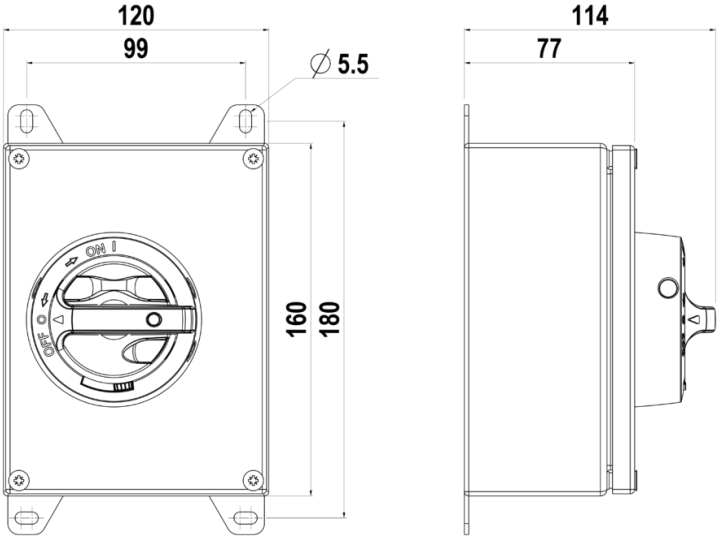

We continuously improve our products; specifications, features and appearances may change without prior notice.

TECHNICAL DATA

NUMBER OF POLES	4
ENCLOSURE	RA2 (120 x 160 x 77 mm)
ENCLOSURE TYPE	Stainless steel enclosure (AISI 316L)
UL	UL 60947-4-1A
EMC	No
ATEX	No
IP RATING	IP66
NEMA	4X
RATED OPERATIONAL CURRENT AC-23A 415 V, IE (A)	25
RATED OPERATIONAL CURRENT AC-23A 690 V, IE (A)	25
RATED OPERATIONAL POWER, 3-PHASE 1500 RPM SQUIRREL-CAGE MOTOR AC-23A 690 V (KW)	22
RATED INSULATION VOLTAGE, UI (V)	800
AMPERE RATING (600V)	25
HP 208V	5
HP 415V	7.5
HP 480V	15
HP 600V	10
SWITCH TYPE DESCRIPTION	Manual motor controller
WIRE SIZE (CU ONLY)	14-8AWG
NOMINAL VALUES WITH CABLE SIZE (MM^2)	10
RATED THERMAL CURRENT, ITH (A)	40
RATED THERMAL CURRENT (ENCLOSED), ITHE (A)	40
RATED OPERATIONAL CURRENT AC-21A 415 V, IE (A)	40
RATED OPERATIONAL CURRENT AC-21A 500 V, IE (A)	40

We continuously improve our products; specifications, features and appearances may change without prior notice.

RATED OPERATIONAL CURRENT AC-21A 690 V, IE (A)	40
RATED OPERATIONAL CURRENT AC-22A 415 V, IE (A)	25
RATED OPERATIONAL CURRENT AC-22A 500 V, IE (A)	25
RATED OPERATIONAL CURRENT AC-22A 690 V, IE (A)	25
RATED OPERATIONAL CURRENT AC-23A 500 V, IE (A)	25
RATED OPERATIONAL POWER, 3-PHASE 1500 RPM SQUIRREL-CAGE MOTOR AC-23A 415 V (KW)	11
RATED OPERATIONAL POWER, 3-PHASE 1500 RPM SQUIRREL-CAGE MOTOR AC-23A 500 V (KW)	15
RATED FUSED SHORT-CIRCUIT CURRENT, BACK-UP FUSE OPTION 1 (A)	40
RATED FUSED SHORT-CIRCUIT CURRENT, R.M.S. IQ OPTION 1 (KA)	50
RATED FUSED SHORT-CIRCUIT CURRENT, PEAK VALUE (KA)	6
RATED IMPULSE WITHSTAND VOLTAGE, UIMP (KV)	8
RATED SHORT-CIRCUIT MAKING CAPACITY, ICM 690 V (KA)	2.5
RATED SHORT-TIME WITHSTAND CURRENT 1 S, ICW 690 V (KA)	1.7
RATED BREAKING CAPACITY, AC-23A 415 V (A)	200
RATED BREAKING CAPACITY, AC-23A 500 V (A)	200
RATED BREAKING CAPACITY, AC-23A 690 V (A)	200
ELECTRICAL ENDURANCE (NUMBER OF OPERATIONS)	3000

We continuously improve our products; specifications, features and appearances may change without prior notice.

MECHANICAL ENDURANCE (NUMBER OF OPERATIONS)	50000
TERMINAL / BOLT SIZE CU (MM^2)	1,5..16
MAXIMUM TERMINAL TORQUE (NM)	1.8
SWITCH TYPE	Load Break Switch

We continuously improve our products; specifications, features and appearances may change without prior notice.