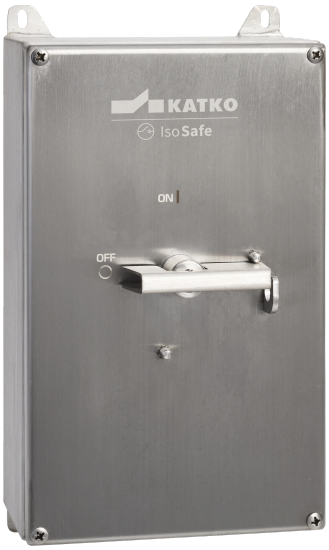

IsoSafe

KER 380CUL RA4R

3x63A 400V 30kW

PRODUCT NUMBER	30735
GTIN	6419410307359
TECHNICAL NAME	3x63A 400V 30kW
ETIM CLASS	EC000216

MEASUREMENTS

HEIGHT	260 mm
WIDTH	160 mm
DEPTH	90 mm
VOLUME	3.744 l
NET WEIGHT	2.4927 kg

LOGISTICAL DATA

PACKAGE SIZE 1 DEPTH	90 mm
PACKAGE SIZE 1 HEIGHT	260 mm
PACKAGE SIZE 1 WIDTH	160 mm
PACKAGE SIZE 1 WEIGHT	2.4927 kg
PACKAGE SIZE 1 VOLUME	3.744 l

DIMENSIONAL DRAWING

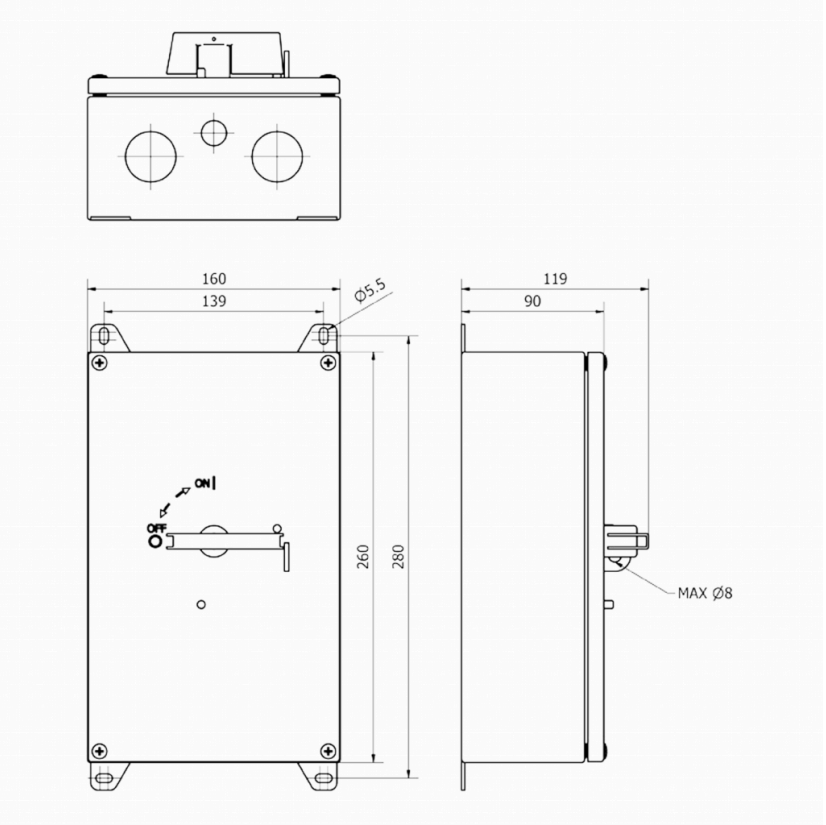

We continuously improve our products; specifications, features and appearances may change without prior notice.

TECHNICAL DATA

NUMBER OF POLES	3
ENCLOSURE	RA4R (160 x 260 x 90 mm)
ENCLOSURE TYPE	Stainless steel enclosure (AISI 316L)
UL	UL 60947-4-1A
EMC	No
ATEX	No
IP RATING	IP66
AMPERE RATING (600V)	80
HP 208V	15
HP 415V	15
HP 480V	30
HP 600V	40
SWITCH TYPE DESCRIPTION	Manual motor controller
WIRE SIZE (CU ONLY)	8-1/0AWG

We continuously improve our products; specifications, features and appearances may change without prior notice.