KATKO



ConnectSafe
KCS19139RP

PRODUCT NUMBER	32898
GTIN	6419410328989
E-NUMBER FI	3412361
ETIM CLASS	EC000261

MEASUREMENTS

HEIGHT	19 mm
WIDTH	135 mm
DEPTH	90 mm
VOLUME	0.2309 l

LOGISTICAL DATA

SALES UNIT	1

DIMENSIONAL DRAWING

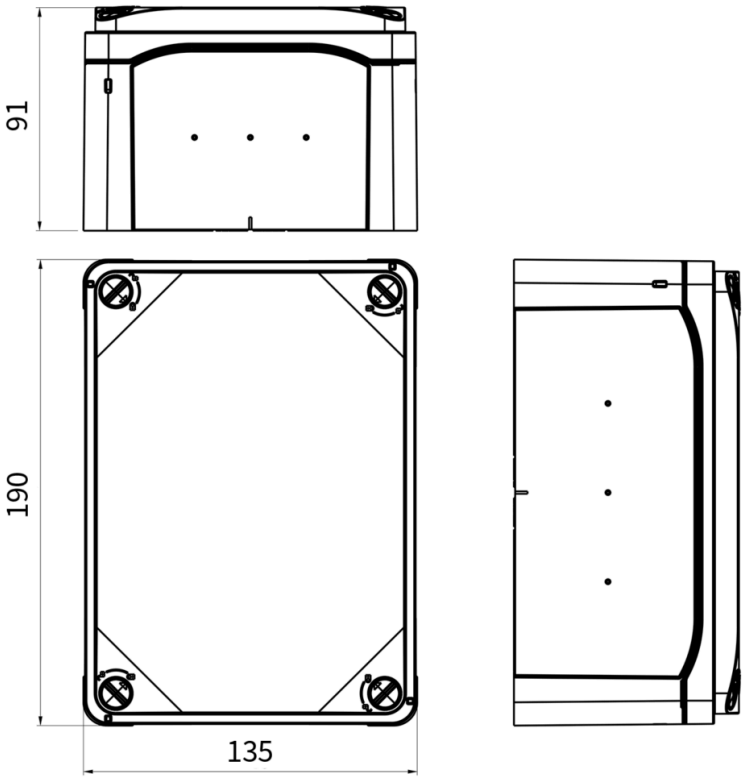

We continuously improve our products; specifications, features and appearances may change without prior notice.

KATKO ConnectSafe

TECHNICAL DATA

ENCLOSURE TYPE	Recycled polycarbonate
IP RATING	IP66

We continuously improve our products; specifications, features and appearances may change without prior notice.