LoadSafe

KU 3315CO SV

3x315A 690V AC-22

PRODUCT NUMBER	30033
GTIN	6419410300336
E-NUMBER FI	3602939
ETIM CLASS	EC000216

MEASUREMENTS

HEIGHT	185 mm
WIDTH	203.5 mm
DEPTH	229 mm
VOLUME	8.6213 l
NET WEIGHT	6.0735 kg

LOGISTICAL DATA

SALES UNIT	1
PACKAGE SIZE 1	1
PACKAGE SIZE 1 DEPTH	229 mm
PACKAGE SIZE 1 HEIGHT	185 mm
PACKAGE SIZE 1 WIDTH	203.5 mm
PACKAGE SIZE 1 WEIGHT	6.0735 kg
PACKAGE SIZE 1 VOLUME	8.6213 l

DIMENSIONAL DRAWING

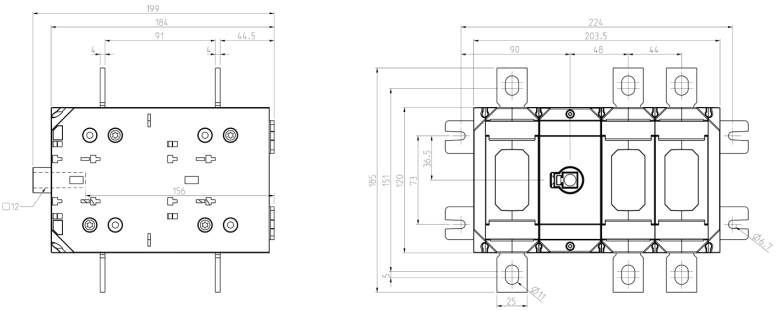

We continuously improve our products; specifications, features and appearances may change without prior notice.

TECHNICAL DATA

NUMBER OF POLES	3
ATEX	No
RATED OPERATIONAL CURRENT AC-23A 415 V, IE (A)	315
RATED OPERATIONAL CURRENT AC-23A 690 V, IE (A)	315
RATED OPERATIONAL POWER, 3-PHASE 1500 RPM SQUIRREL-CAGE MOTOR AC-23A 690 V (KW)	315
RATED INSULATION VOLTAGE, UI (V)	1000
NOMINAL VALUES WITH CABLE SIZE (MM^2)	185
RATED THERMAL CURRENT, ITH (A)	315
RATED OPERATIONAL CURRENT AC-21A 415 V, IE (A)	315
RATED OPERATIONAL CURRENT AC-21A 500 V, IE (A)	315
RATED OPERATIONAL CURRENT AC-21A 690 V, IE (A)	315
RATED OPERATIONAL CURRENT AC-22A 415 V, IE (A)	315
RATED OPERATIONAL CURRENT AC-22A 500 V, IE (A)	315
RATED OPERATIONAL CURRENT AC-22A 690 V, IE (A)	315
RATED OPERATIONAL CURRENT AC-23A 500 V, IE (A)	315
RATED OPERATIONAL POWER, 3-PHASE 1500 RPM SQUIRREL-CAGE MOTOR AC-23A 415 V (KW)	160

We continuously improve our products; specifications, features and appearances may change without prior notice.

RATED OPERATIONAL POWER, 3-PHASE 1500 RPM SQUIRREL-CAGE MOTOR AC-23A 500 V (KW)	200
RATED FUSED SHORT-CIRCUIT CURRENT, BACK-UP FUSE OPTION 1 (A)	400
RATED FUSED SHORT-CIRCUIT CURRENT, R.M.S. IQ OPTION 1 (KA)	100
RATED FUSED SHORT-CIRCUIT CURRENT, PEAK VALUE (KA)	42
RATED IMPULSE WITHSTAND VOLTAGE, UIMP (KV)	12
RATED SHORT-CIRCUIT MAKING CAPACITY, ICM 690 V (KA)	27.5
RATED SHORT-TIME WITHSTAND CURRENT 1 S, ICW 1000 V (KA)	13.5
RATED BREAKING CAPACITY, AC-23A 415 V (A)	2520
RATED BREAKING CAPACITY, AC-23A 500 V (A)	2520
RATED BREAKING CAPACITY, AC-23A 690 V (A)	2520
ELECTRICAL ENDURANCE (NUMBER OF OPERATIONS)	2000
MECHANICAL ENDURANCE (NUMBER OF OPERATIONS)	10000
TERMINAL / BOLT SIZE CU (MM^2)	M10
MAXIMUM TERMINAL TORQUE (NM)	30..44
SWITCH TYPE	Load Break Switch

We continuously improve our products; specifications, features and appearances may change without prior notice.