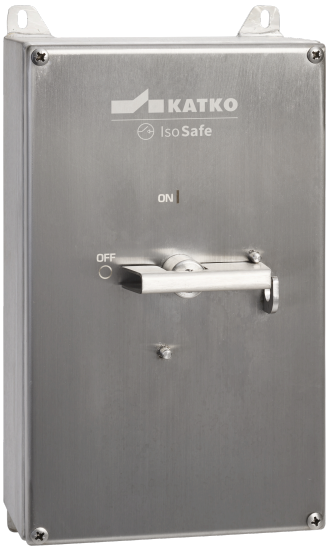

IsoSafe
- KER 640UL RA4R

6x40A 400V 22kW

PRODUCT NUMBER	30761
GTIN	6419410307618
ETIM CLASS	EC000216

MEASUREMENTS

HEIGHT	260 mm
WIDTH	160 mm
DEPTH	90 mm
VOLUME	3.744 l
NET WEIGHT	2.7158 kg

LOGISTICAL DATA

PACKAGE SIZE 1 DEPTH	90 mm
PACKAGE SIZE 1 HEIGHT	260 mm
PACKAGE SIZE 1 WIDTH	160 mm
PACKAGE SIZE 1 WEIGHT	2.7158 kg
PACKAGE SIZE 1 VOLUME	3.744 l

DIMENSIONAL DRAWING

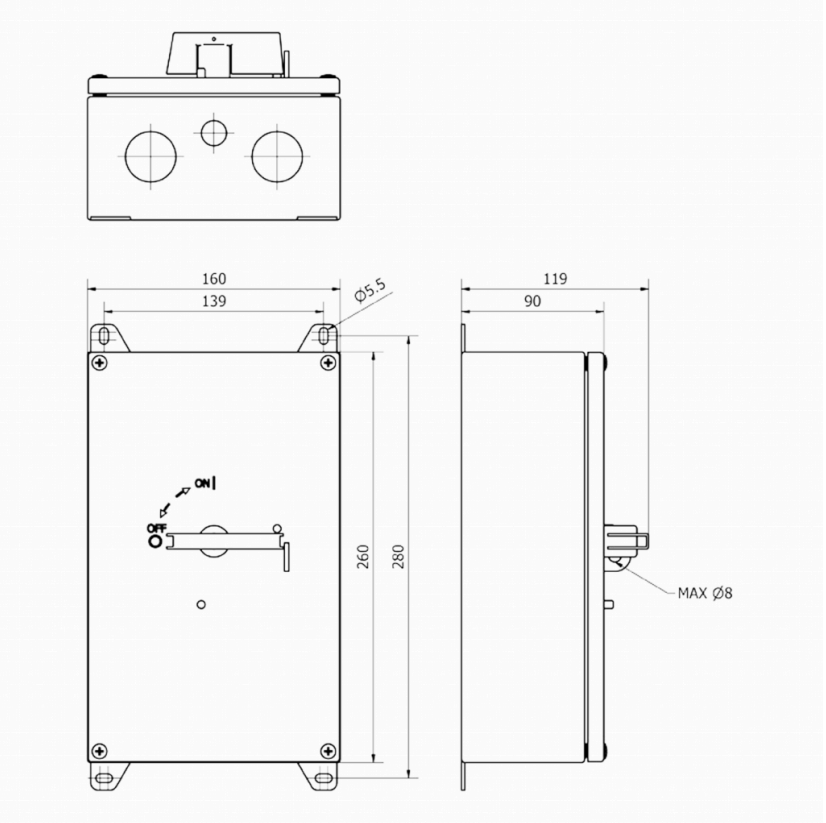

We continuously improve our products; specifications, features and appearances may change without prior notice.

TECHNICAL DATA

NUMBER OF POLES	6
ENCLOSURE	RA4R (160 x 260 x 90 mm)
ENCLOSURE TYPE	Stainless steel enclosure (AISI 316L)
UL	UL 60947-4-1A
EMC	No
ATEX	No
IP RATING	IP66
NEMA	4X
RATED OPERATIONAL CURRENT AC-23A 415 V, IE (A)	40
RATED OPERATIONAL CURRENT AC-23A 690 V, IE (A)	32
RATED OPERATIONAL POWER, 3-PHASE 1500 RPM SQUIRREL-CAGE MOTOR AC-23A 690 V (KW)	30
RATED INSULATION VOLTAGE, UI (V)	800
AMPERE RATING (600V)	40
HP 208V	7.5
HP 415V	10
HP 480V	20
HP 600V	15
SWITCH TYPE DESCRIPTION	Manual motor controller
WIRE SIZE (CU ONLY)	14-8AWG
NOMINAL VALUES WITH CABLE SIZE (MM^2)	16
RATED THERMAL CURRENT, ITH (A)	63
RATED THERMAL CURRENT (ENCLOSED), ITHE (A)	63
RATED OPERATIONAL CURRENT AC-21A 415 V, IE (A)	63
RATED OPERATIONAL CURRENT AC-21A 500 V, IE (A)	63

We continuously improve our products; specifications, features and appearances may change without prior notice.

RATED OPERATIONAL CURRENT AC-21A 690 V, IE (A)	63
RATED OPERATIONAL CURRENT AC-22A 415 V, IE (A)	40
RATED OPERATIONAL CURRENT AC-22A 500 V, IE (A)	40
RATED OPERATIONAL CURRENT AC-22A 690 V, IE (A)	40
RATED OPERATIONAL CURRENT AC-23A 500 V, IE (A)	32
RATED OPERATIONAL POWER, 3-PHASE 1500 RPM SQUIRREL-CAGE MOTOR AC-23A 415 V (KW)	22
RATED OPERATIONAL POWER, 3-PHASE 1500 RPM SQUIRREL-CAGE MOTOR AC-23A 500 V (KW)	22
RATED FUSED SHORT-CIRCUIT CURRENT, BACK-UP FUSE OPTION 1 (A)	40
RATED FUSED SHORT-CIRCUIT CURRENT, R.M.S. IQ OPTION 1 (KA)	50
RATED FUSED SHORT-CIRCUIT CURRENT, PEAK VALUE (KA)	6
RATED IMPULSE WITHSTAND VOLTAGE, UIMP (KV)	8
RATED SHORT-CIRCUIT MAKING CAPACITY, ICM 690 V (KA)	2.5
RATED SHORT-TIME WITHSTAND CURRENT 1 S, ICW 690 V (KA)	1.7
RATED BREAKING CAPACITY, AC-23A 415 V (A)	320
RATED BREAKING CAPACITY, AC-23A 500 V (A)	256
RATED BREAKING CAPACITY, AC-23A 690 V (A)	256
ELECTRICAL ENDURANCE (NUMBER OF OPERATIONS)	3000

We continuously improve our products; specifications, features and appearances may change without prior notice.

MECHANICAL ENDURANCE (NUMBER OF OPERATIONS)	50000
TERMINAL / BOLT SIZE CU (MM^2)	1,5..16
MAXIMUM TERMINAL TORQUE (NM)	1.8
SWITCH TYPE	Load Break Switch

We continuously improve our products; specifications, features and appearances may change without prior notice.