IsoSafe

KEM 6160 MF11

6x160A 400V 90kW

PRODUCT NUMBER	32360
GTIN	6419410323601
E-NUMBER FI	3610329
ETIM CLASS	EC000216

MEASUREMENTS

HEIGHT	380 mm
WIDTH	280 mm
DEPTH	130 mm
VOLUME	13.832 l
NET WEIGHT	4.0526 kg

LOGISTICAL DATA

SALES UNIT	1
PACKAGE SIZE 1	1
PACKAGE SIZE 1 DEPTH	130 mm
PACKAGE SIZE 1 HEIGHT	380 mm
PACKAGE SIZE 1 WIDTH	280 mm
PACKAGE SIZE 1 WEIGHT	4.0526 kg
PACKAGE SIZE 1 VOLUME	13.832 l

DIMENSIONAL DRAWING

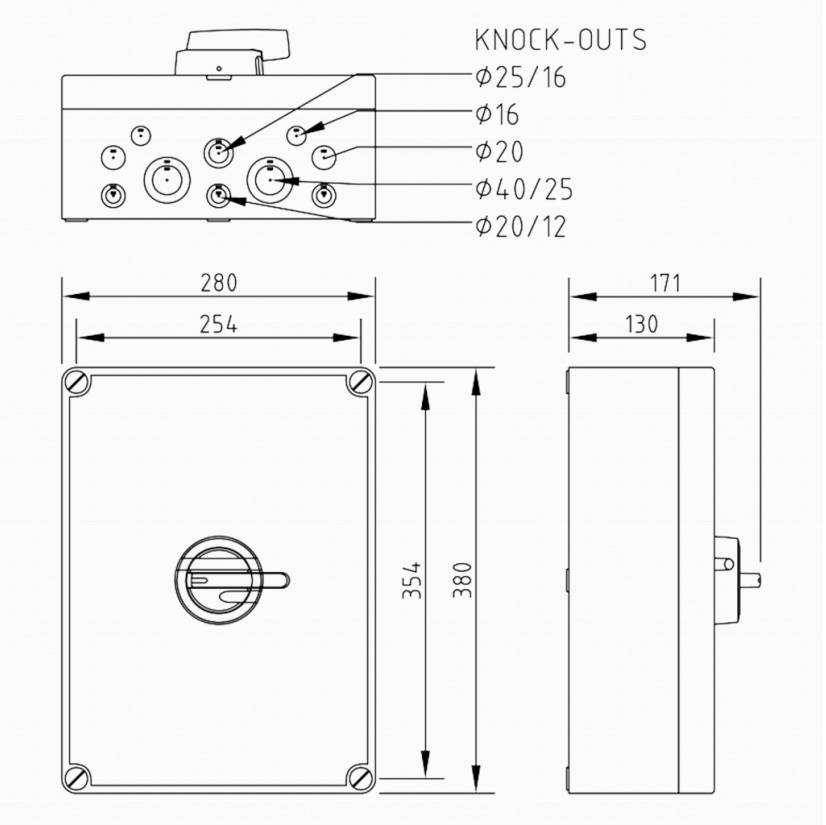

We continuously improve our products; specifications, features and appearances may change without prior notice.

TECHNICAL DATA

NUMBER OF POLES	6
ENCLOSURE	MF11 (280 x 380 x 130 mm)
ENCLOSURE TYPE	Polycarbonate
EMC	No
ATEX	No
IP RATING	IP66
NEMA	4X
RATED OPERATIONAL CURRENT AC-23A 415 V, IE (A)	160
RATED OPERATIONAL CURRENT AC-23A 690 V, IE (A)	100
RATED OPERATIONAL POWER, 3-PHASE 1500 RPM SQUIRREL-CAGE MOTOR AC-23A 690 V (KW)	90
RATED INSULATION VOLTAGE, UI (V)	800
SWITCH TYPE DESCRIPTION	Isolating switch
NOMINAL VALUES WITH CABLE SIZE (MM^2)	95
RATED THERMAL CURRENT, ITH (A)	200
RATED THERMAL CURRENT (ENCLOSED), ITHE (A)	200
RATED OPERATIONAL CURRENT AC-21A 415 V, IE (A)	160
RATED OPERATIONAL CURRENT AC-21A 500 V, IE (A)	160
RATED OPERATIONAL CURRENT AC-21A 690 V, IE (A)	160
RATED OPERATIONAL CURRENT AC-22A 415 V, IE (A)	160
RATED OPERATIONAL CURRENT AC-22A 500 V, IE (A)	160

We continuously improve our products; specifications, features and appearances may change without prior notice.

RATED OPERATIONAL CURRENT AC-22A 690 V, IE (A)	160
RATED OPERATIONAL CURRENT AC-23A 500 V, IE (A)	100
RATED OPERATIONAL POWER, 3-PHASE 1500 RPM SQUIRREL-CAGE MOTOR AC-23A 415 V (KW)	90
RATED OPERATIONAL POWER, 3-PHASE 1500 RPM SQUIRREL-CAGE MOTOR AC-23A 500 V (KW)	55
RATED FUSED SHORT-CIRCUIT CURRENT, BACK-UP FUSE OPTION 1 (A)	160
RATED FUSED SHORT-CIRCUIT CURRENT, R.M.S. IQ OPTION 1 (KA)	65
RATED FUSED SHORT-CIRCUIT CURRENT, PEAK VALUE (KA)	15
RATED IMPULSE WITHSTAND VOLTAGE, UIMP (KV)	8
RATED SHORT-CIRCUIT MAKING CAPACITY, ICM 690 V (KA)	8
RATED SHORT-TIME WITHSTAND CURRENT 1 S, ICW 690 V (KA)	5
RATED BREAKING CAPACITY, AC-23A 415 V (A)	1280
RATED BREAKING CAPACITY, AC-23A 500 V (A)	800
RATED BREAKING CAPACITY, AC-23A 690 V (A)	800
ELECTRICAL ENDURANCE (NUMBER OF OPERATIONS)	2000
MECHANICAL ENDURANCE (NUMBER OF OPERATIONS)	16000
TERMINAL / BOLT SIZE CU (MM^2)	6..70
MAXIMUM TERMINAL TORQUE (NM)	6
SWITCH TYPE	Load Break Switch

We continuously improve our products; specifications, features and appearances may change without prior notice.