IsoSafe

KEM 110 M2ABS

1x10A 400V 5.5kW

PRODUCT NUMBER	27639
GTIN	6419410276396
ETIM CLASS	EC000216

MEASUREMENTS

HEIGHT	130 mm
WIDTH	96 mm
DEPTH	104 mm
VOLUME	1.2979 l

LOGISTICAL DATA

SALES UNIT	1
PACKAGE SIZE 1	1
PACKAGE SIZE 1 DEPTH	104 mm
PACKAGE SIZE 1 HEIGHT	130 mm
PACKAGE SIZE 1 WIDTH	96 mm
PACKAGE SIZE 1 VOLUME	1.2979 l

DIMENSIONAL DRAWING

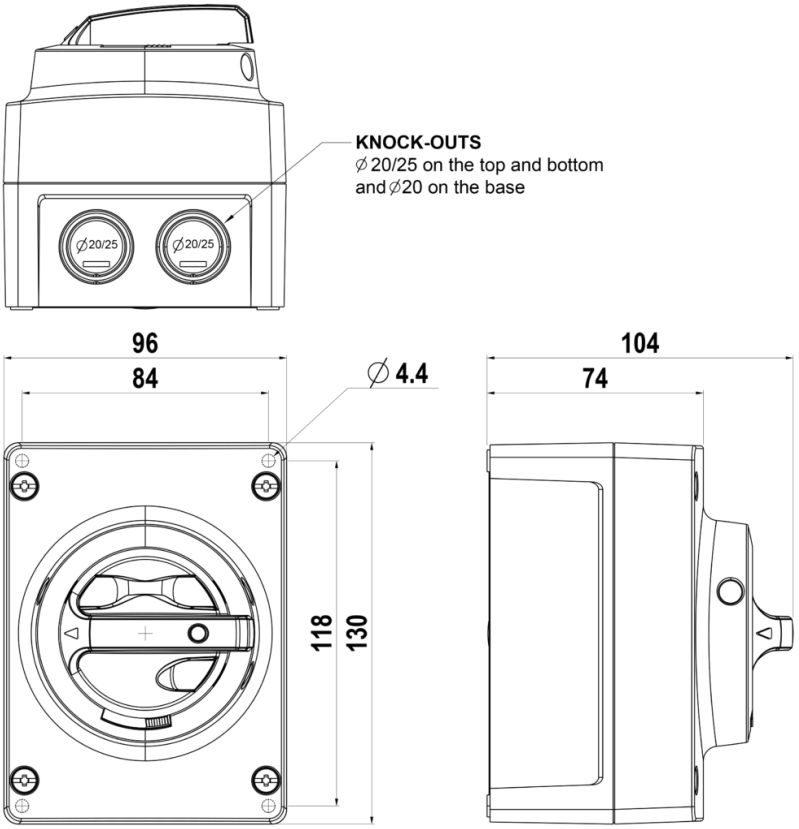

We continuously improve our products; specifications, features and appearances may change without prior notice.

TECHNICAL DATA

NUMBER OF POLES	1
ENCLOSURE	M2 (96 x 130 x 74 mm)
ENCLOSURE TYPE	ABS plastic
EMC	No
ATEX	No
IP RATING	IP65
NEMA	4X
RATED OPERATIONAL CURRENT AC-23A 415 V, IE (A)	10
RATED OPERATIONAL POWER, 1-PHASE 1500 RPM SQUIRREL-CAGE MOTOR AC-23A 240 V (KW)	2
RATED INSULATION VOLTAGE, UI (V)	800
SWITCH TYPE DESCRIPTION	Isolating switch
NOMINAL VALUES WITH CABLE SIZE (MM^2)	2.5
RATED THERMAL CURRENT, ITH (A)	20
RATED THERMAL CURRENT (ENCLOSED), ITHE (A)	20
RATED OPERATIONAL CURRENT AC-21A 415 V, IE (A)	20
RATED OPERATIONAL CURRENT AC-22A 415 V, IE (A)	10
RATED OPERATIONAL CURRENT AC-23A 240 V, IE (A)	10
RATED FUSED SHORT-CIRCUIT CURRENT, BACK-UP FUSE OPTION 1 (A)	25
RATED FUSED SHORT-CIRCUIT CURRENT, R.M.S. IQ OPTION 1 (KA)	50
RATED FUSED SHORT-CIRCUIT CURRENT, PEAK VALUE (KA)	3.8

We continuously improve our products; specifications, features and appearances may change without prior notice.

RATED IMPULSE WITHSTAND VOLTAGE, UIMP (KV)	8
RATED SHORT-CIRCUIT MAKING CAPACITY, ICM 690 V (KA)	1
RATED SHORT-TIME WITHSTAND CURRENT 1 S, ICW 690 V (KA)	0.7
RATED BREAKING CAPACITY, AC-23A 415 V (A)	80
ELECTRICAL ENDURANCE (NUMBER OF OPERATIONS)	3000
MECHANICAL ENDURANCE (NUMBER OF OPERATIONS)	50000
TERMINAL / BOLT SIZE CU (MM^2)	1,5..16
MAXIMUM TERMINAL TORQUE (NM)	1.8
SWITCH TYPE	Load Break Switch

We continuously improve our products; specifications, features and appearances may change without prior notice.