IsoSafe

KEM 3125CVV MF11

3x63A 400V 30kW

PRODUCT NUMBER	32068
GTIN	6419410320686
ETIM CLASS	EC000216

MEASUREMENTS

HEIGHT	380 mm
WIDTH	280 mm
DEPTH	130 mm
VOLUME	13.832 l
NET WEIGHT	3.2179 kg

LOGISTICAL DATA

SALES UNIT	1
PACKAGE SIZE 1	1
PACKAGE SIZE 1 DEPTH	130 mm
PACKAGE SIZE 1 HEIGHT	380 mm
PACKAGE SIZE 1 WIDTH	280 mm
PACKAGE SIZE 1 WEIGHT	3.2179 kg
PACKAGE SIZE 1 VOLUME	13.832 l

DIMENSIONAL DRAWING

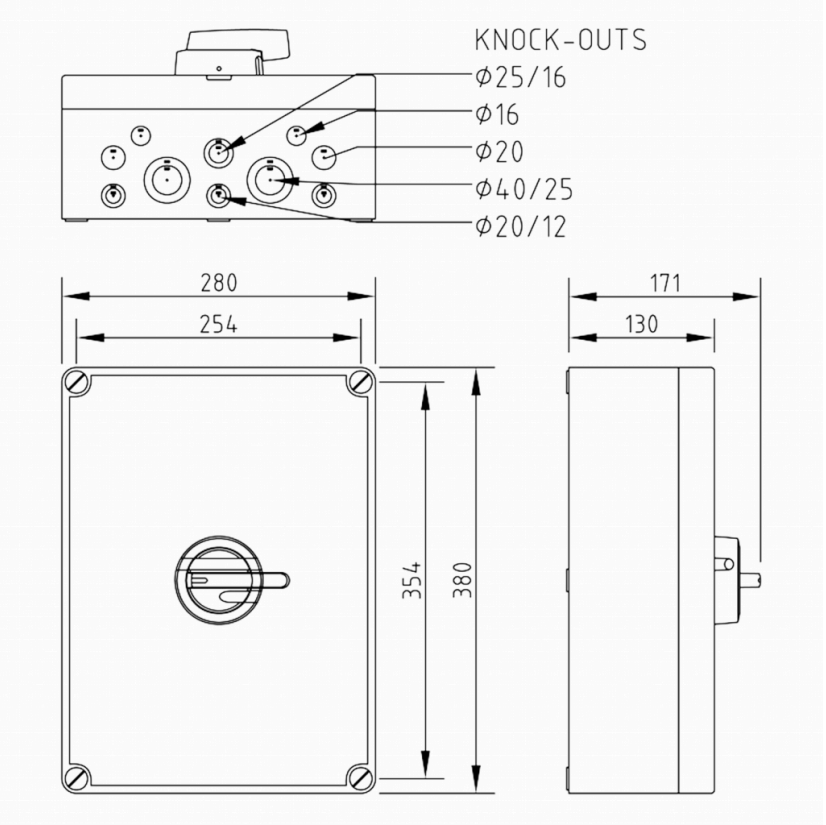

We continuously improve our products; specifications, features and appearances may change without prior notice.

TECHNICAL DATA

NUMBER OF POLES	3
ENCLOSURE	MF11 (280 x 380 x 130 mm)
ENCLOSURE TYPE	Polycarbonate
EMC	No
ATEX	No
IP RATING	IP66
NEMA	4X
RATED OPERATIONAL CURRENT AC-23A 415 V, IE (A)	63
RATED OPERATIONAL CURRENT AC-23A 690 V, IE (A)	40
RATED OPERATIONAL POWER, 3-PHASE 1500 RPM SQUIRREL-CAGE MOTOR AC-23A 690 V (KW)	37
RATED INSULATION VOLTAGE, UI (V)	800
SWITCH TYPE DESCRIPTION	Change-over switch
NOMINAL VALUES WITH CABLE SIZE (MM^2)	50
RATED THERMAL CURRENT, ITH (A)	125
RATED THERMAL CURRENT (ENCLOSED), ITHE (A)	125
RATED OPERATIONAL CURRENT AC-21A 415 V, IE (A)	125
RATED OPERATIONAL CURRENT AC-21A 500 V, IE (A)	125
RATED OPERATIONAL CURRENT AC-21A 690 V, IE (A)	125
RATED OPERATIONAL CURRENT AC-22A 415 V, IE (A)	125
RATED OPERATIONAL CURRENT AC-22A 500 V, IE (A)	80

We continuously improve our products; specifications, features and appearances may change without prior notice.

RATED OPERATIONAL CURRENT AC-22A 690 V, IE (A)	80
RATED OPERATIONAL CURRENT AC-23A 500 V, IE (A)	40
RATED OPERATIONAL POWER, 3-PHASE 1500 RPM SQUIRREL-CAGE MOTOR AC-23A 415 V (KW)	30
RATED OPERATIONAL POWER, 3-PHASE 1500 RPM SQUIRREL-CAGE MOTOR AC-23A 500 V (KW)	30
RATED FUSED SHORT-CIRCUIT CURRENT, BACK-UP FUSE OPTION 1 (A)	125
RATED FUSED SHORT-CIRCUIT CURRENT, R.M.S. IQ OPTION 1 (KA)	30
RATED FUSED SHORT-CIRCUIT CURRENT, PEAK VALUE (KA)	10
RATED IMPULSE WITHSTAND VOLTAGE, UIMP (KV)	8
RATED SHORT-CIRCUIT MAKING CAPACITY, ICM 690 V (KA)	2.5
RATED SHORT-TIME WITHSTAND CURRENT 1 S, ICW 690 V (KA)	2
RATED BREAKING CAPACITY, AC-23A 415 V (A)	504
RATED BREAKING CAPACITY, AC-23A 500 V (A)	320
RATED BREAKING CAPACITY, AC-23A 690 V (A)	320
ELECTRICAL ENDURANCE (NUMBER OF OPERATIONS)	3000
MECHANICAL ENDURANCE (NUMBER OF OPERATIONS)	50000
TERMINAL / BOLT SIZE CU (MM^2)	2.5..35
MAXIMUM TERMINAL TORQUE (NM)	2.5
SWITCH TYPE	Load Break Switch

We continuously improve our products; specifications, features and appearances may change without prior notice.