

ConnectSafe
KCS271910RP

PRODUCT NUMBER	32899
GTIN	6419410328996
E-NUMBER FI	3412362
ETIM CLASS	EC000261

MEASUREMENTS

HEIGHT	270 mm
WIDTH	190 mm
DEPTH	100 mm
VOLUME	5.13 l

LOGISTICAL DATA

SALES UNIT	1

DIMENSIONAL DRAWING

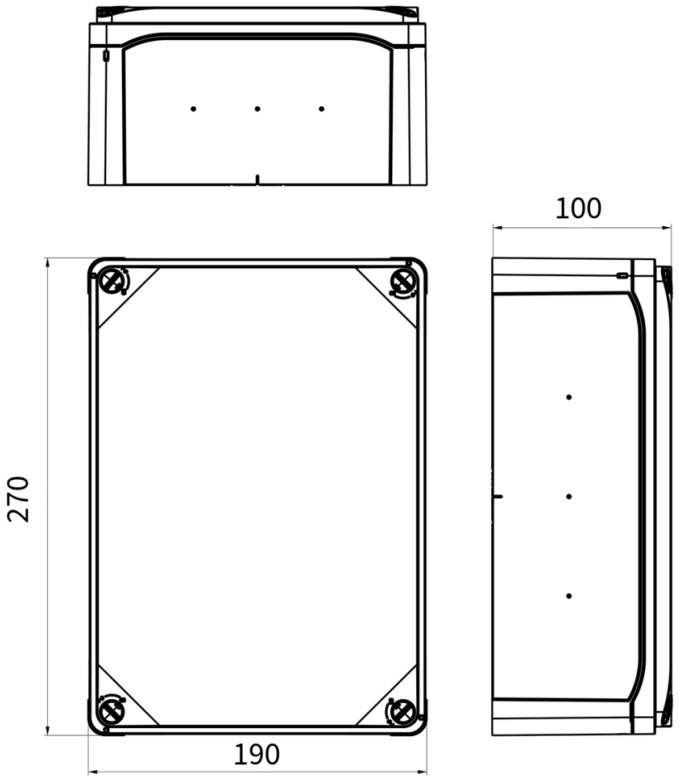

We continuously improve our products; specifications, features and appearances may change without prior notice.

KATKO ConnectSafe

TECHNICAL DATA

ENCLOSURE TYPE	Recycled polycarbonate
IP RATING	IP66

We continuously improve our products; specifications, features and appearances may change without prior notice.