IsoSafe

KET 463 T3

4x40A 400V 22kW

PRODUCT NUMBER	33993
GTIN	6419410339930
ETIM CLASS	EC000216

MEASUREMENTS

HEIGHT	200 mm
WIDTH	150 mm
DEPTH	120 mm
VOLUME	3.6 l
NET WEIGHT	2.2414 kg

LOGISTICAL DATA

SALES UNIT	1
PACKAGE SIZE 1	1
PACKAGE SIZE 1 DEPTH	120 mm
PACKAGE SIZE 1 HEIGHT	200 mm
PACKAGE SIZE 1 WIDTH	150 mm
PACKAGE SIZE 1 WEIGHT	2.2414 kg
PACKAGE SIZE 1 VOLUME	3.6 l

DIMENSIONAL DRAWING

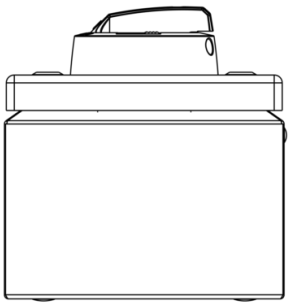

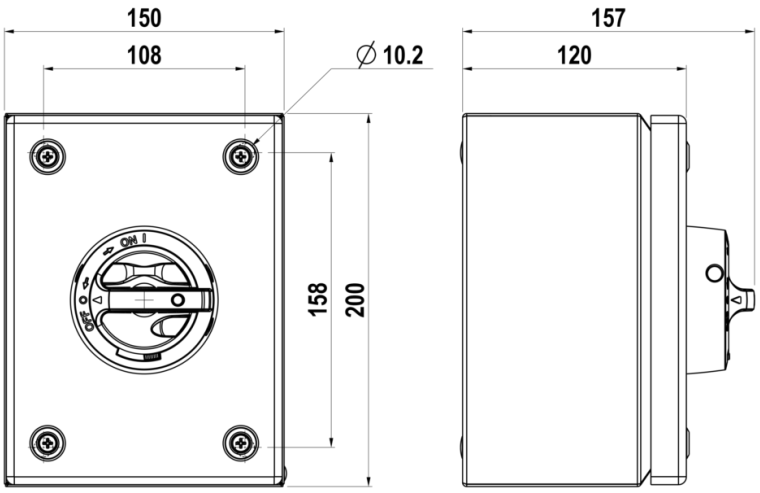

We continuously improve our products; specifications, features and appearances may change without prior notice.

TECHNICAL DATA

NUMBER OF POLES	4
ENCLOSURE	T3 (150 x 200 x 120 mm)
ENCLOSURE TYPE	Painted sheet steel
EMC	No
ATEX	No
IP RATING	IP66
NEMA	4
RATED OPERATIONAL CURRENT AC-23A 415 V, IE (A)	40
RATED OPERATIONAL CURRENT AC-23A 690 V, IE (A)	40
RATED OPERATIONAL POWER, 3-PHASE 1500 RPM SQUIRREL-CAGE MOTOR AC-23A 690 V (KW)	37
RATED INSULATION VOLTAGE, UI (V)	800
SWITCH TYPE DESCRIPTION	Isolating switch
NOMINAL VALUES WITH CABLE SIZE (MM^2)	25
RATED THERMAL CURRENT, ITH (A)	80
RATED THERMAL CURRENT (ENCLOSED), ITHE (A)	80
RATED OPERATIONAL CURRENT AC-21A 415 V, IE (A)	80
RATED OPERATIONAL CURRENT AC-21A 500 V, IE (A)	80
RATED OPERATIONAL CURRENT AC-21A 690 V, IE (A)	80
RATED OPERATIONAL CURRENT AC-22A 415 V, IE (A)	63
RATED OPERATIONAL CURRENT AC-22A 500 V, IE (A)	63

We continuously improve our products; specifications, features and appearances may change without prior notice.

RATED OPERATIONAL CURRENT AC-22A 690 V, IE (A)	63
RATED OPERATIONAL CURRENT AC-23A 500 V, IE (A)	40
RATED OPERATIONAL POWER, 3-PHASE 1500 RPM SQUIRREL-CAGE MOTOR AC-23A 415 V (KW)	22
RATED OPERATIONAL POWER, 3-PHASE 1500 RPM SQUIRREL-CAGE MOTOR AC-23A 500 V (KW)	30
RATED FUSED SHORT-CIRCUIT CURRENT, BACK-UP FUSE OPTION 1 (A)	80
RATED FUSED SHORT-CIRCUIT CURRENT, R.M.S. IQ OPTION 1 (KA)	50
RATED FUSED SHORT-CIRCUIT CURRENT, PEAK VALUE (KA)	8.2
RATED IMPULSE WITHSTAND VOLTAGE, UIMP (KV)	8
RATED SHORT-CIRCUIT MAKING CAPACITY, ICM 690 V (KA)	3.1
RATED SHORT-TIME WITHSTAND CURRENT 1 S, ICW 690 V (KA)	2
RATED BREAKING CAPACITY, AC-23A 415 V (A)	320
RATED BREAKING CAPACITY, AC-23A 500 V (A)	320
RATED BREAKING CAPACITY, AC-23A 690 V (A)	320
ELECTRICAL ENDURANCE (NUMBER OF OPERATIONS)	3000
MECHANICAL ENDURANCE (NUMBER OF OPERATIONS)	50000
TERMINAL / BOLT SIZE CU (MM^2)	2.5..35
MAXIMUM TERMINAL TORQUE (NM)	2.5
SWITCH TYPE	Load Break Switch

We continuously improve our products; specifications, features and appearances may change without prior notice.